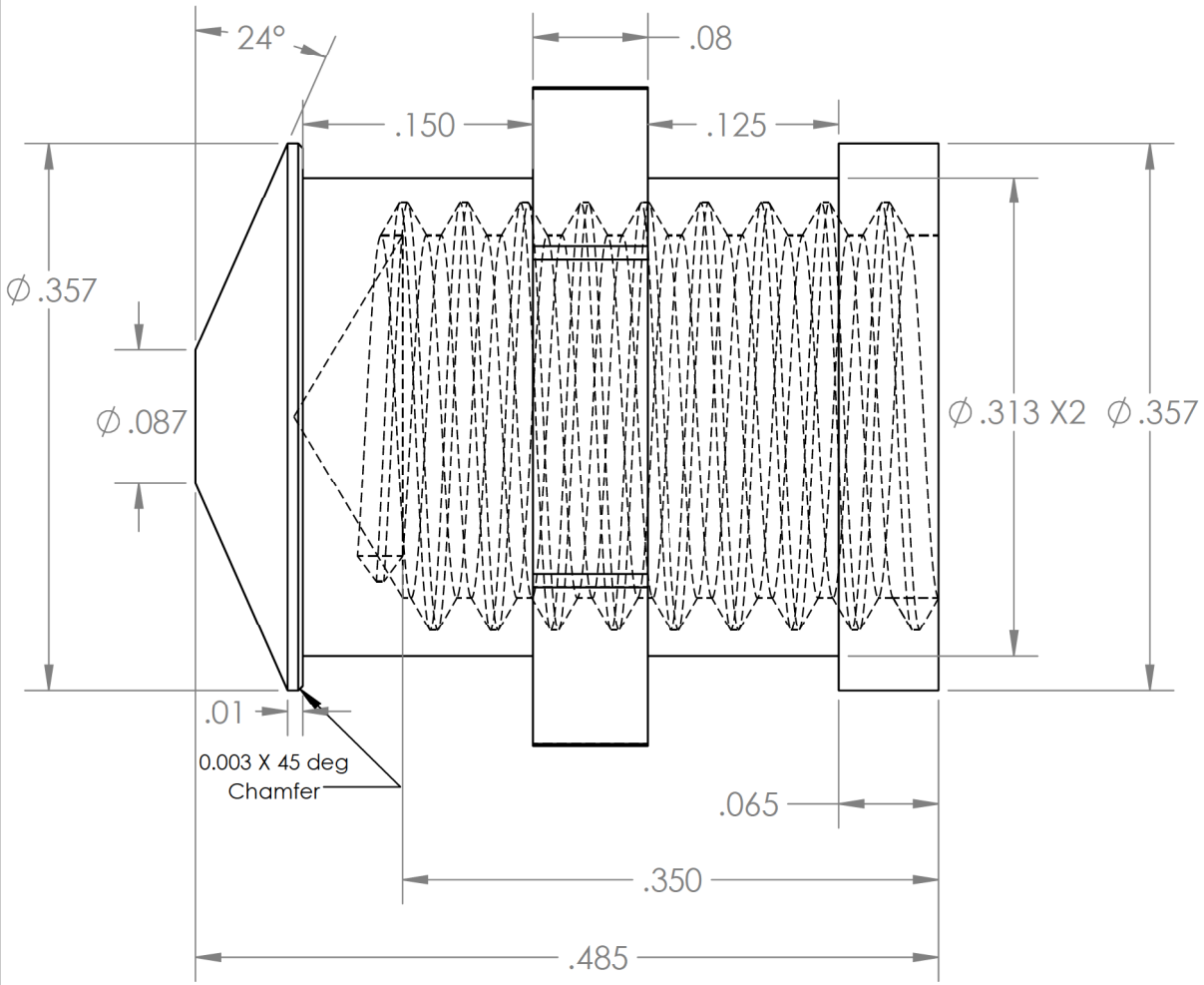

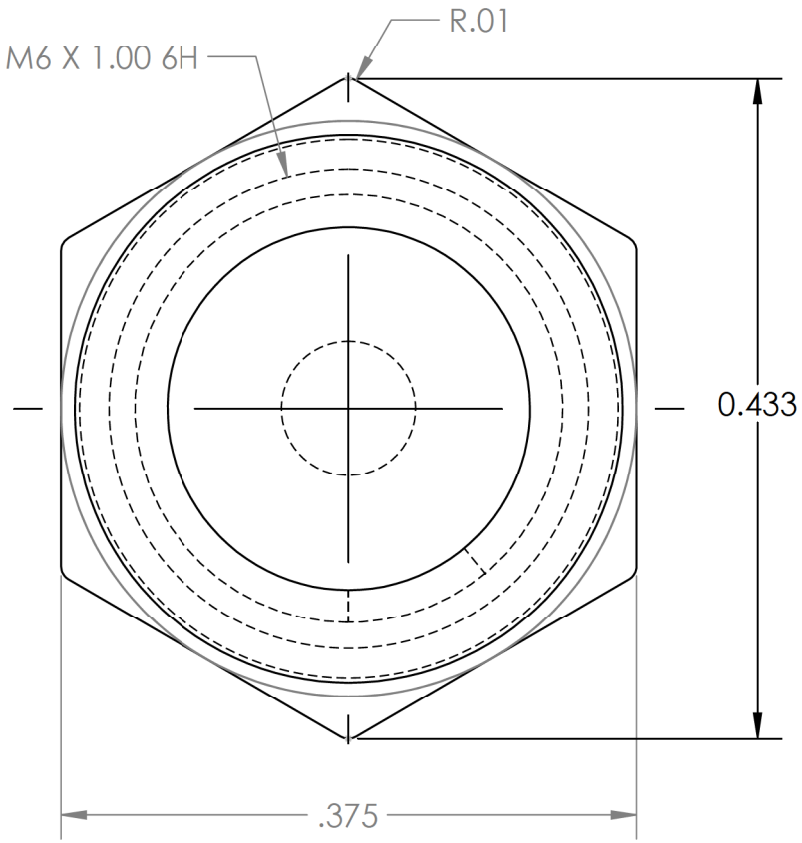

Note:

Dimensions are in inches except for the thread size is Metric

Tolerances - x.xxx - +/- 0.005 x.xx - +/- 0.01 x.x - +/- 0.1	FINISH: NA				DEBURR AND BREAK SHARP EDGES	DO NOT SCALE DRAWING / REVISION
						MANO ENGINEERING, LLC
	NAME	SIGNATURE	DATE			TITLE: M6, Series 45 Molded in Insert
DRAWN						
CHK'D						
APPV'D						
MFG						
Q.A				MATERIAL: Free-Cutting Brass		DWG NO. ADDA -Series 45 / A4
				WEIGHT: 2.97 grams		SCALE:8:1 / SHEET 1 OF 1